Aqsa Khalid
Lecturer
School of Computing

CS3002 Information Security

Advanced Encryption Standard

Advanced Encryption Standard

- In 1997, NIST called for proposals for a new cipher to be standardized
  - goals: efficiency, security, HW/SW suitability
  - key length 128, 192, 256 bits
- They selected Rijndael cipher in Nov 2001 and declared it as 'Advanced Encryption Standard'.
- It is also a block cipher. Uses 128 bit data block & 128/192/256 bit keys
- Now its implementations are widely available

The AES Cipher - Rijndael

- An iterative cipher with several rounds
  - processes data as block of 4 columns of 4 bytes (128 bits)
  - operates on entire data block in every round

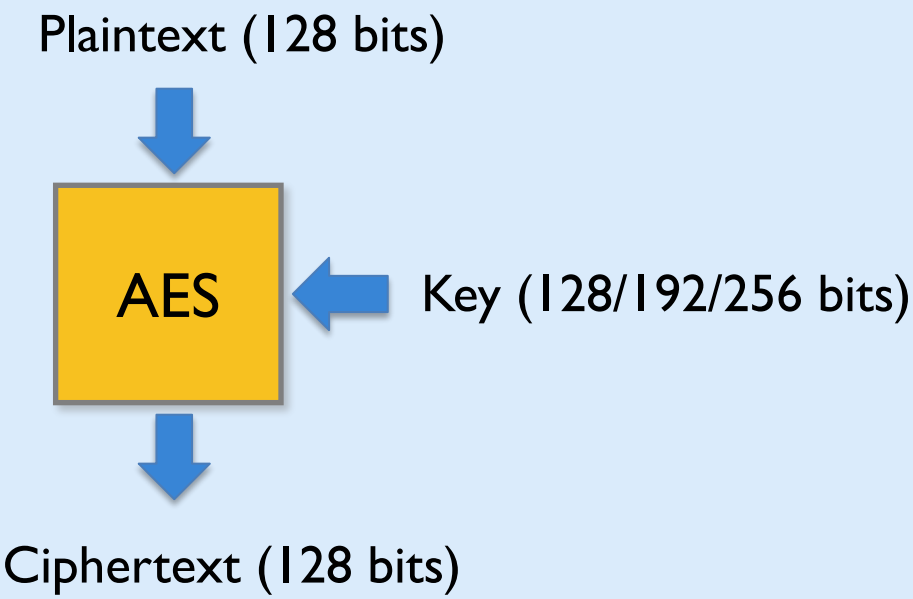

Multiple rounds

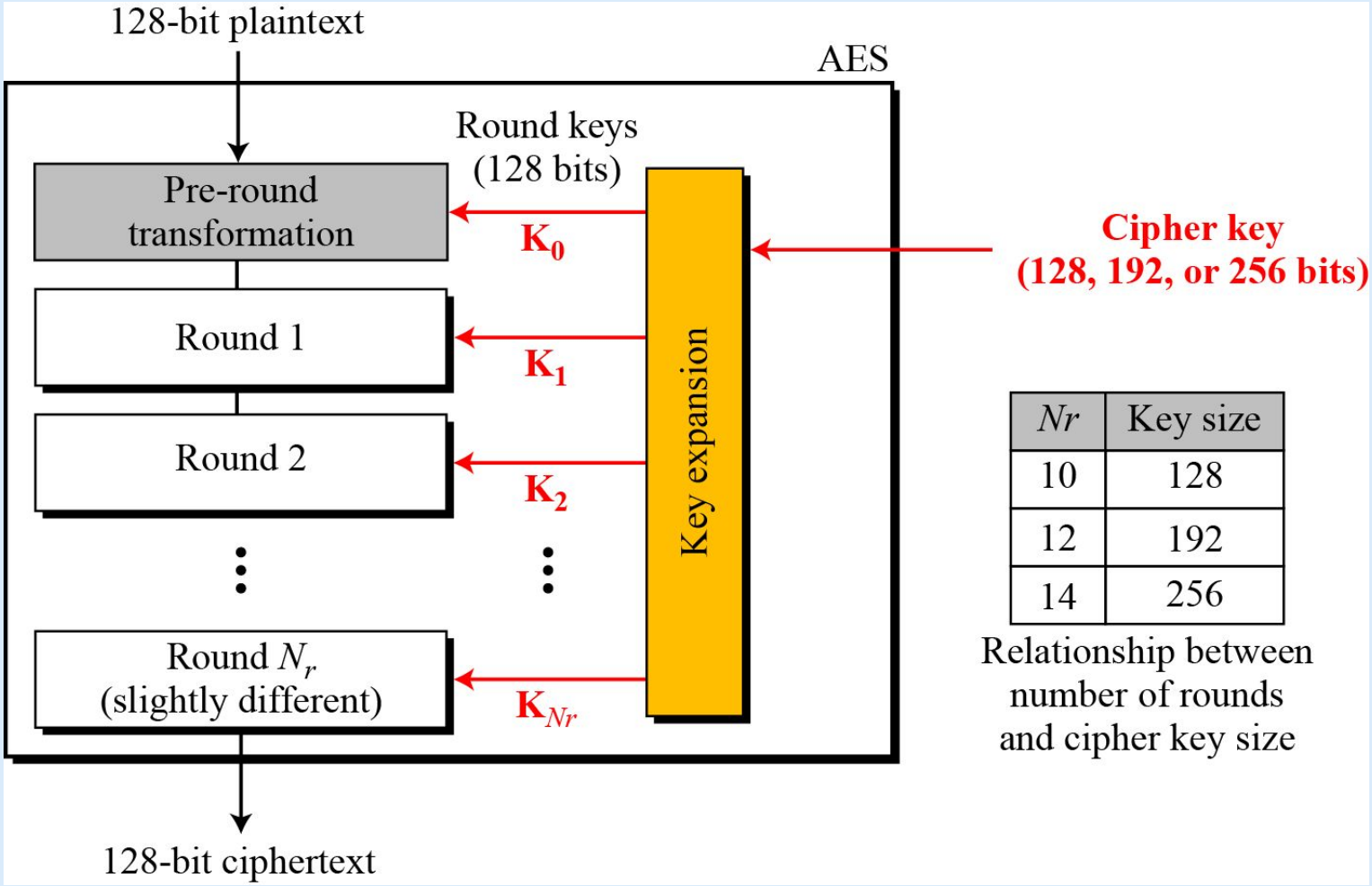

Nr	Key size
10	128
12	192
14	256

Relationship between number of rounds and cipher key size

Overall Structure

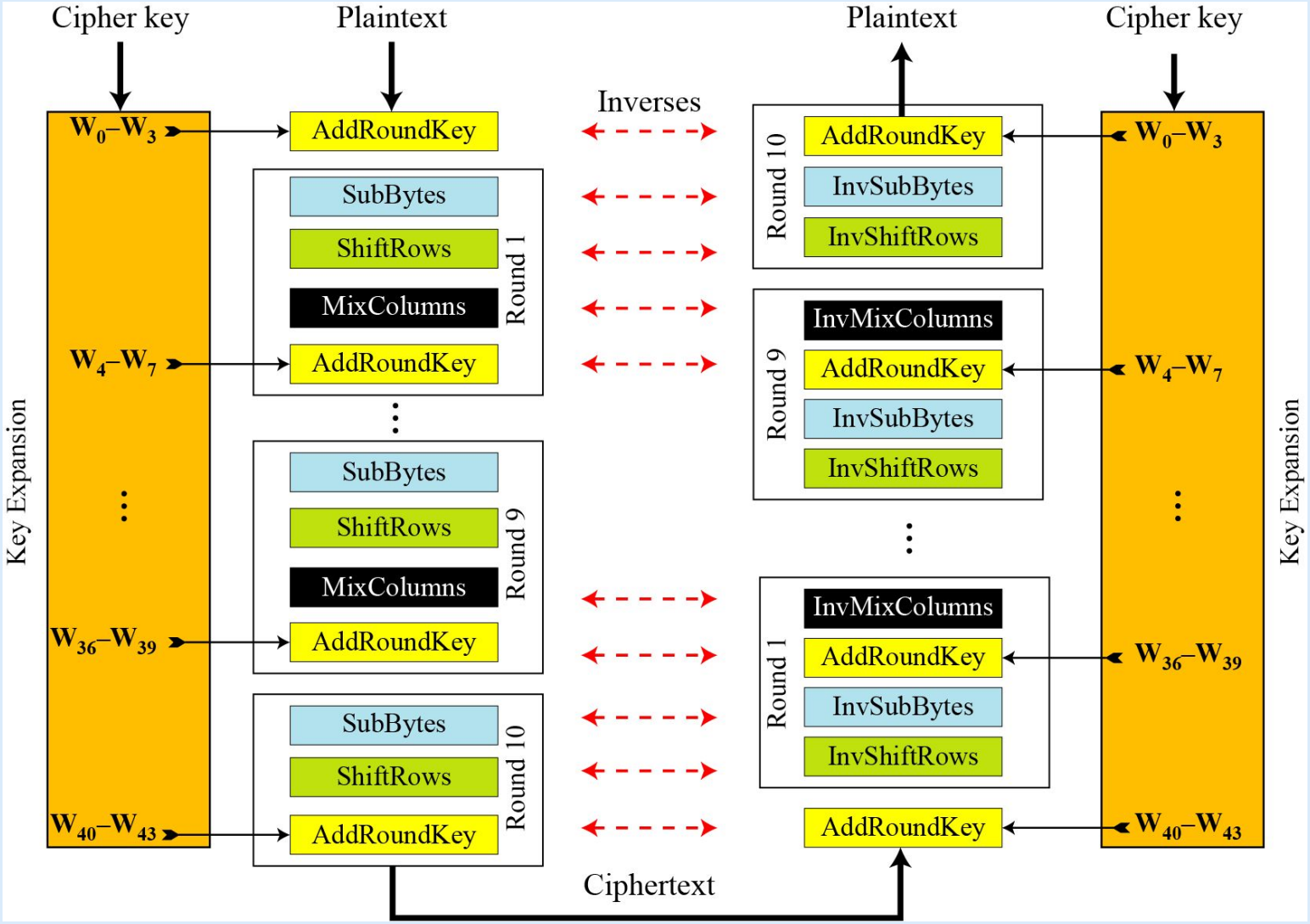

Structure of 128-bit block

- Data block viewed as table of bytes
- Represented as 4 by 4 matrix of bytes.

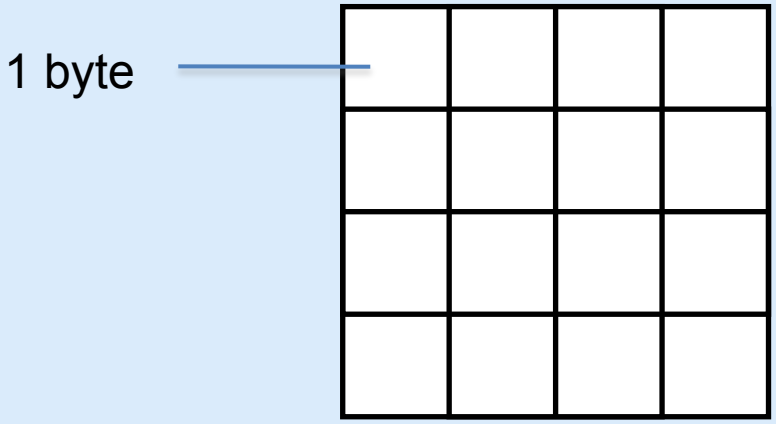

Data block represented as 'State'

b_0	b_1	b_2	b_3	b_4	b_5	b_6	b_7	b_8	b_9	b_{10}	b_{11}	b_{12}	b_{13}	b_{14}	b_{15}

Block (bytes)

State
$$\begin{bmatrix} s_{0,0} = b_0 & s_{0,1} = b_4 & s_{0,2} = b_8 & s_{0,3} = b_{12} \\ s_{1,0} = b_1 & s_{1,1} = b_5 & s_{1,2} = b_9 & s_{1,3} = b_{13} \\ s_{2,0} = b_2 & s_{2,1} = b_6 & s_{2,2} = b_{10} & s_{2,3} = b_{14} \\ s_{3,0} = b_3 & s_{3,1} = b_7 & s_{3,2} = b_{11} & s_{3,3} = b_{15} \end{bmatrix}$$

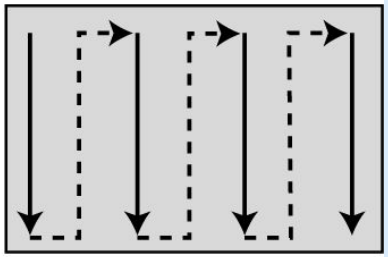

Example – changing plaintext to State

padding

Text	A	E	S	U	S	E	S	A	M	A	T	R	I	X	Z	Z
Hexadecimal	00	04	12	14	12	04	12	00	0C	00	13	11	08	23	19	19

$$\begin{bmatrix} 00 & 12 & 0C & 08 \\ 04 & 04 & 00 & 23 \\ 12 & 12 & 13 & 19 \\ 14 & 00 & 11 & 19 \end{bmatrix} \text{State}$$

Details of each round

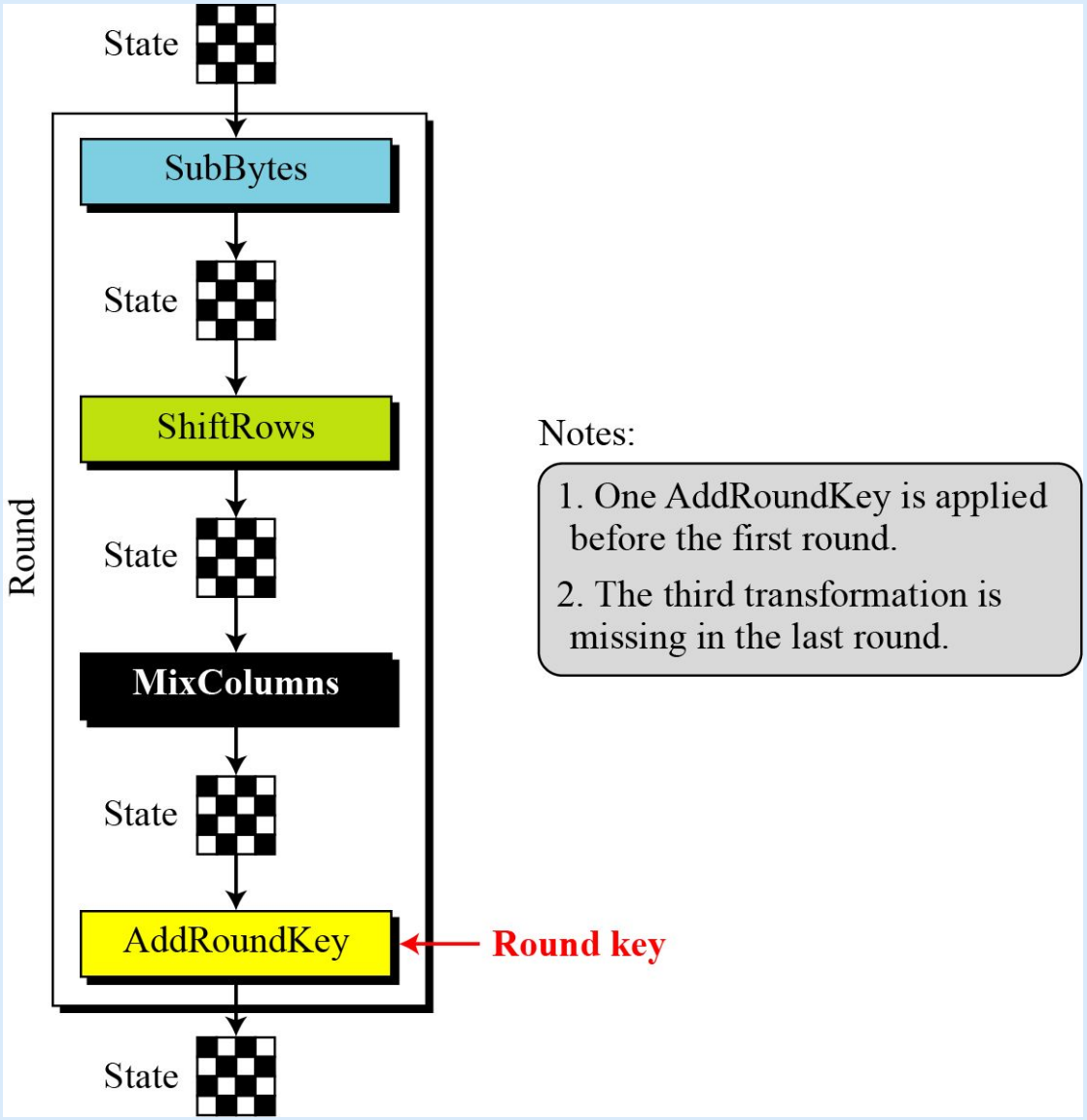

Notes:

1. One AddRoundKey is applied before the first round.
2. The third transformation is missing in the last round.

SubBytes Operation

The SubBytes operation involves 16 independent byte-to-byte substitutions.

* Let $S_{1,1}$ = **xy**

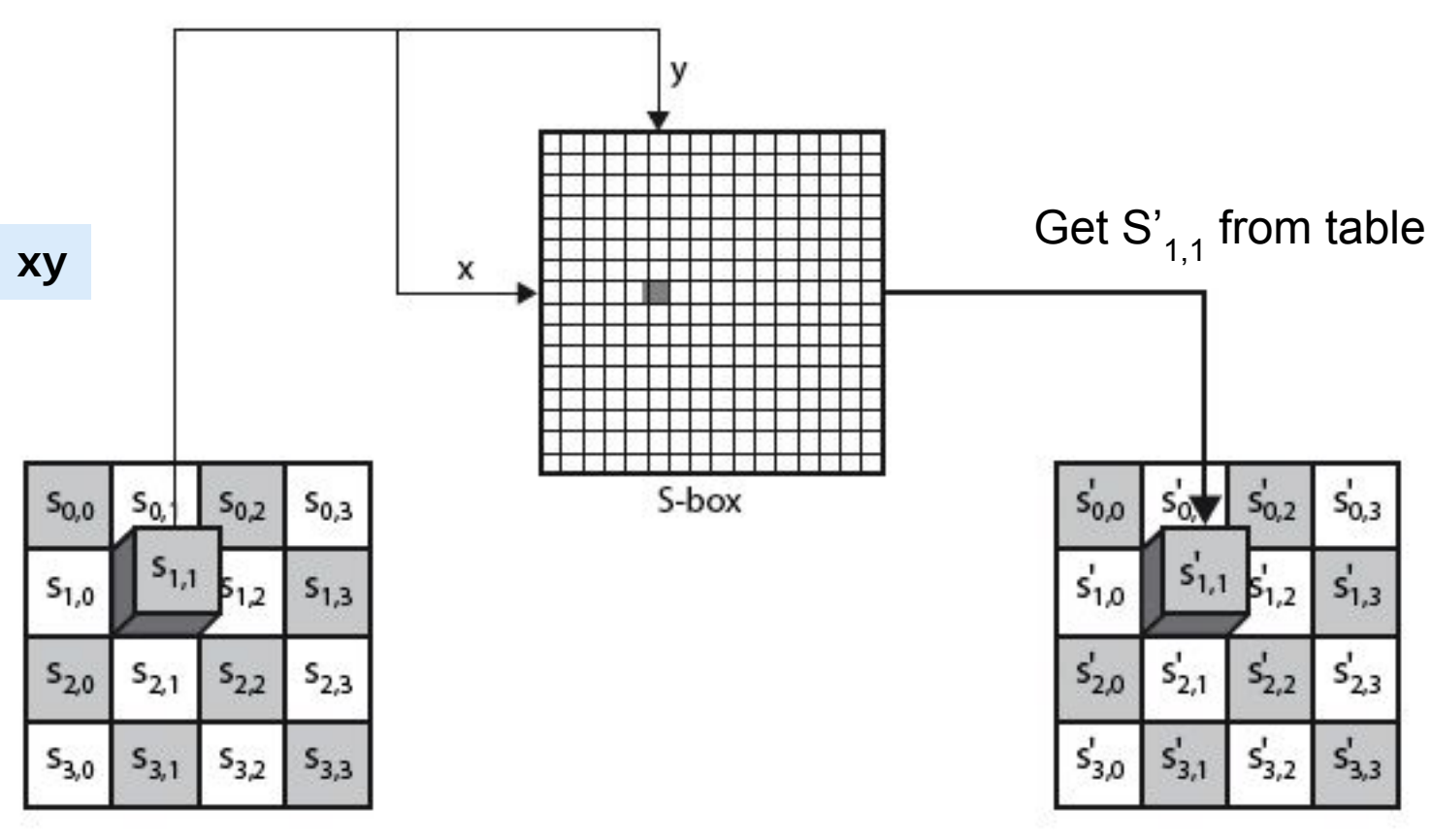

* Interpret a byte as two hexadecimal digits **xy**

SubBytes Table

Implemented by table lookup

		y															
		0	**1**	**2**	**3**	**4**	**5**	**6**	**7**	**8**	**9**	**A**	**B**	**C**	**D**	**E**	**F**
x	**0**	63	7C	77	7B	F2	6B	6F	C5	30	01	67	2B	FE	D7	AB	76
	1	CA	82	C9	7D	FA	59	47	F0	AD	D4	A2	AF	9C	A4	72	C0
	2	B7	FD	93	26	36	3F	F7	CC	34	A5	E5	F1	71	D8	31	15
	3	04	C7	23	C3	18	96	05	9A	07	12	80	E2	EB	27	B2	75
	4	09	83	2C	1A	1B	6E	5A	A0	52	3B	D6	B3	29	E3	2F	84
	5	53	D1	00	ED	20	FC	B1	5B	6A	CB	BE	39	4A	4C	58	CF
	6	D0	EF	AA	FB	43	4D	33	85	45	F9	02	7F	50	3C	9F	A8
	7	51	A3	40	8F	92	9D	38	F5	BC	B6	DA	21	10	FF	F3	D2
	8	CD	0C	13	EC	5F	97	44	17	C4	A7	7E	3D	64	5D	19	73
	9	60	81	4F	DC	22	2A	90	88	46	EE	B8	14	DE	5E	0B	DB
	A	E0	32	3A	0A	49	06	24	5C	C2	D3	AC	62	91	95	E4	79
	B	E7	C8	37	6D	8D	D5	4E	A9	6C	56	F4	EA	65	7A	AE	08
	C	BA	78	25	2E	1C	A6	B4	C6	E8	DD	74	1F	4B	BD	8B	8A
	D	70	3E	B5	66	48	03	F6	0E	61	35	57	B9	86	C1	1D	9E
	E	E1	F8	98	11	69	D9	8E	94	9B	1E	87	E9	CE	55	28	DF
	F	8C	A1	89	0D	BF	E6	42	68	41	99	2D	0F	B0	54	BB	16

InvSubBytes Table

		y															
		0	**1**	**2**	**3**	**4**	**5**	**6**	**7**	**8**	**9**	**A**	**B**	**C**	**D**	**E**	**F**
x	**0**	52	09	6A	D5	30	36	A5	38	BF	40	A3	9E	81	F3	D7	FB
	1	7C	E3	39	82	9B	2F	FF	87	34	8E	43	44	C4	DE	E9	CB
	2	54	7B	94	32	A6	C2	23	3D	EE	4C	95	0B	42	FA	C3	4E
	3	08	2E	A1	66	28	D9	24	B2	76	5B	A2	49	6D	8B	D1	25
	4	72	F8	F6	64	86	68	98	16	D4	A4	5C	CC	5D	65	B6	92
	5	6C	70	48	50	FD	ED	B9	DA	5E	15	46	57	A7	8D	9D	84
	6	90	D8	AB	00	8C	BC	D3	0A	F7	E4	58	05	B8	B3	45	06
	7	D0	2C	1E	8F	CA	3F	0F	02	C1	AF	BD	03	01	13	8A	6B
	8	3A	91	11	41	4F	67	DC	EA	97	F2	CF	CE	F0	B4	E6	73
	9	96	AC	74	22	E7	AD	35	85	E2	F9	37	E8	1C	75	DF	6E
	A	47	F1	1A	71	1D	29	C5	89	6F	B7	62	0E	AA	18	BE	1B
	B	FC	56	3E	4B	C6	D2	79	20	9A	DB	C0	FE	78	CD	5A	F4
	C	1F	DD	A8	33	88	07	C7	31	B1	12	10	59	27	80	EC	5F
	D	60	51	7F	A9	19	B5	4A	0D	2D	E5	7A	9F	93	C9	9C	EF
	E	A0	E0	3B	4D	AE	2A	F5	B0	C8	EB	BB	3C	83	53	99	61
	F	17	2B	04	7E	BA	77	D6	26	E1	69	14	63	55	21	0C	7D

SubByte Example

- The SubBytes and InvSubBytes transformations are inverses of each other.

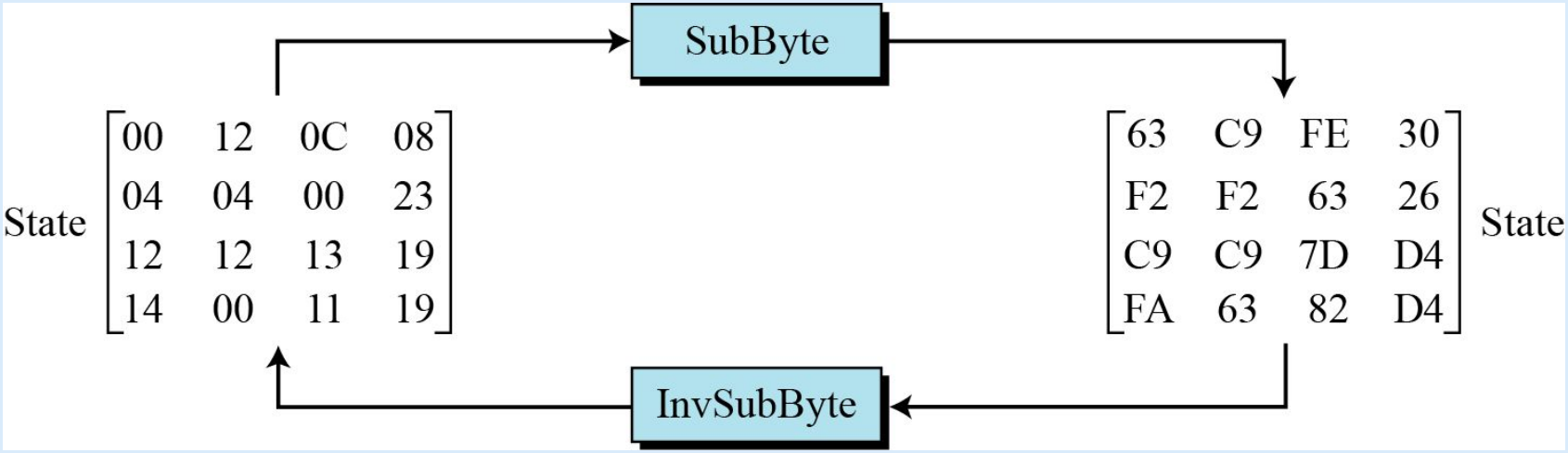

ShiftRows

- Shifting permutes the bytes.
- Does a circular byte shift in each row
  - 1st row is unchanged
  - 2nd row does 1 byte circular shift to left
  - 3rd row does 2 byte circular shift to left
  - 4th row does 3 byte circular shift to left
- In encryption, the transformation is called ShiftRows
- In decryption, the transformation is called InvShiftRows and the shifting is to the right

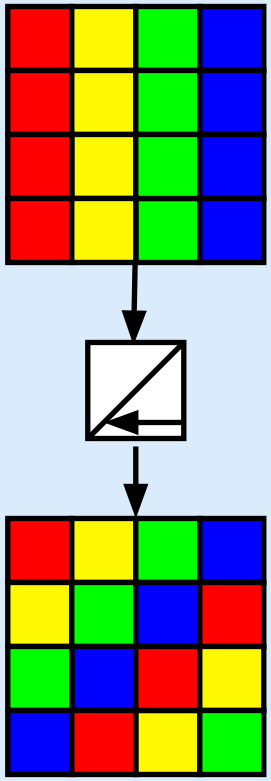

ShiftRows Scheme

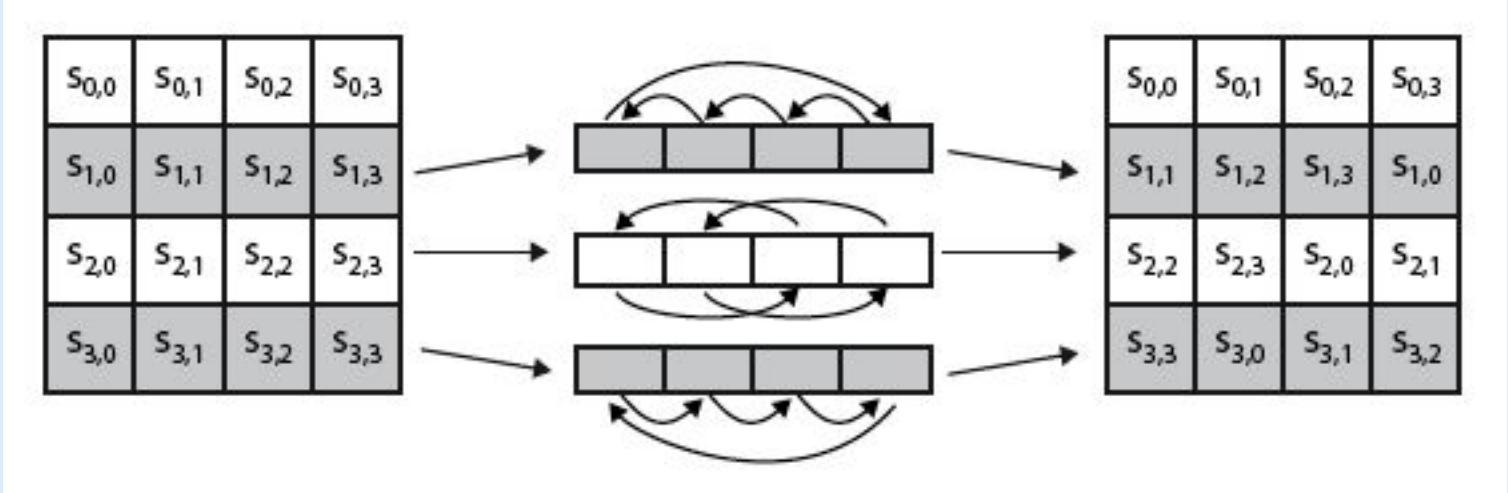

Exampl
e

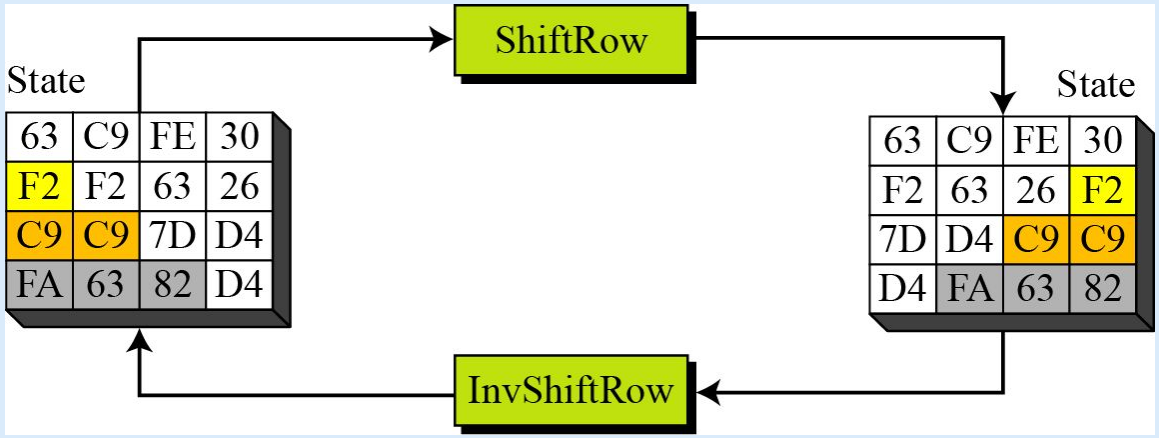

MixColumns

- ShiftRows and MixColumns provide diffusion to the cipher
- In MixColumns, each column is processed separately
- Each byte is replaced by a value dependent on all 4 bytes in the column

- Effectively a matrix multiplication in finite field $GF(2^8)$ using prime polynomial $x^8+x^4+x^3+x+1$
  - Mathematics for this part is beyond course scope

MixColumns Scheme

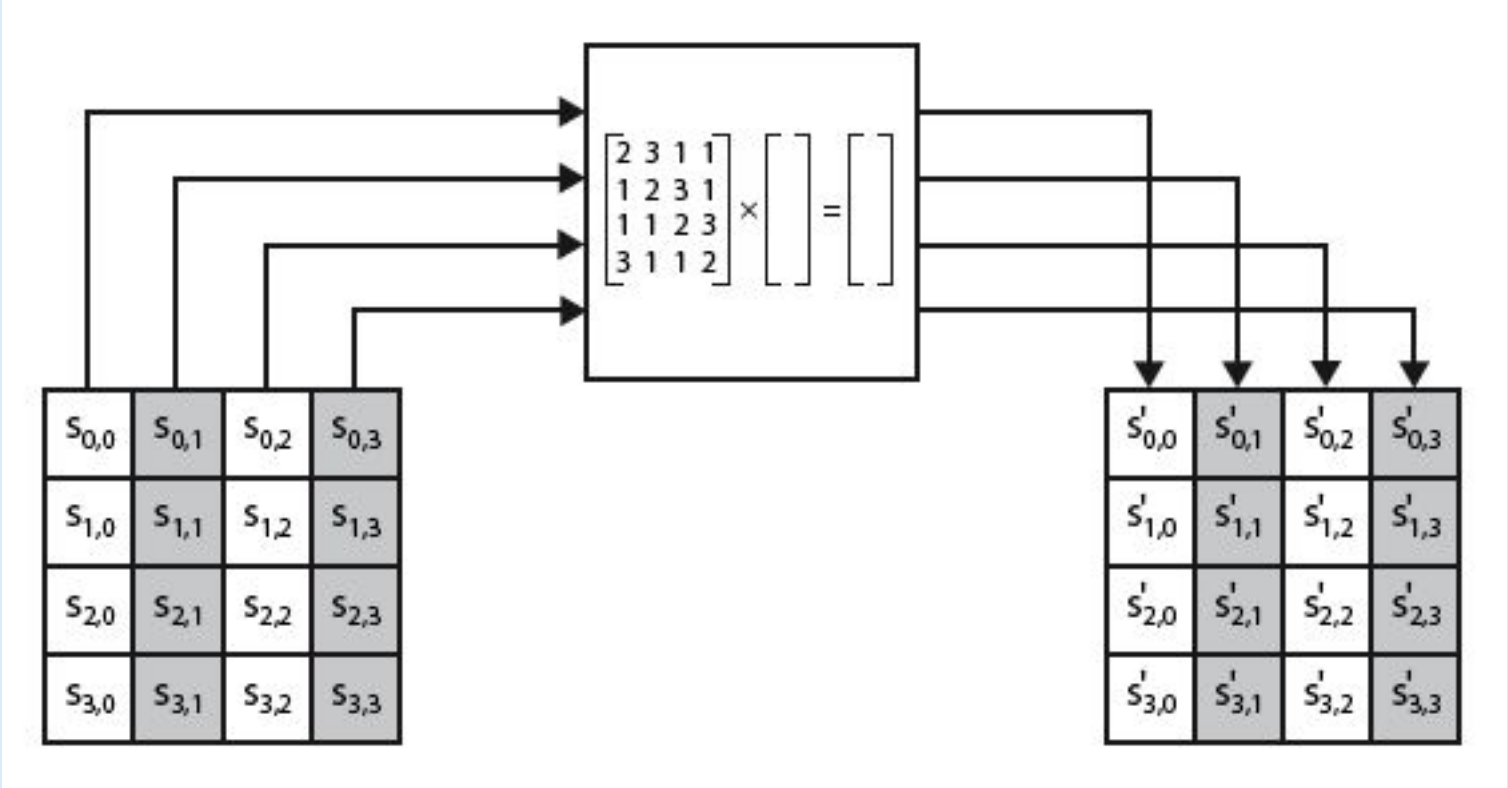

The MixColumns transformation operates at the column level; it transforms each column of the state to a new column.

MixColumn and InvMixColumn

During decryption, inverse mixing matrix is used

$$\underset{C}{\begin{bmatrix} 02 & 03 & 01 & 01 \\ 01 & 02 & 03 & 01 \\ 01 & 01 & 02 & 03 \\ 03 & 01 & 01 & 02 \end{bmatrix}} \xleftrightarrow{\text{Inverse}} \underset{C^{-1}}{\begin{bmatrix} 0E & 0B & 0D & 09 \\ 09 & 0E & 0B & 0D \\ 0D & 09 & 0E & 0B \\ 0B & 0D & 09 & 0E \end{bmatrix}}$$

AddRoundKey

This transformation XORs state matrix with 128-bits of the round key

- AddRoundKey proceeds one column at a time.
  - adds a round key word to each state column matrix
  - the operation is matrix addition
- Inverse for decryption is identical
  - since XOR is its own inverse, with same keys

AddRoundKey Scheme

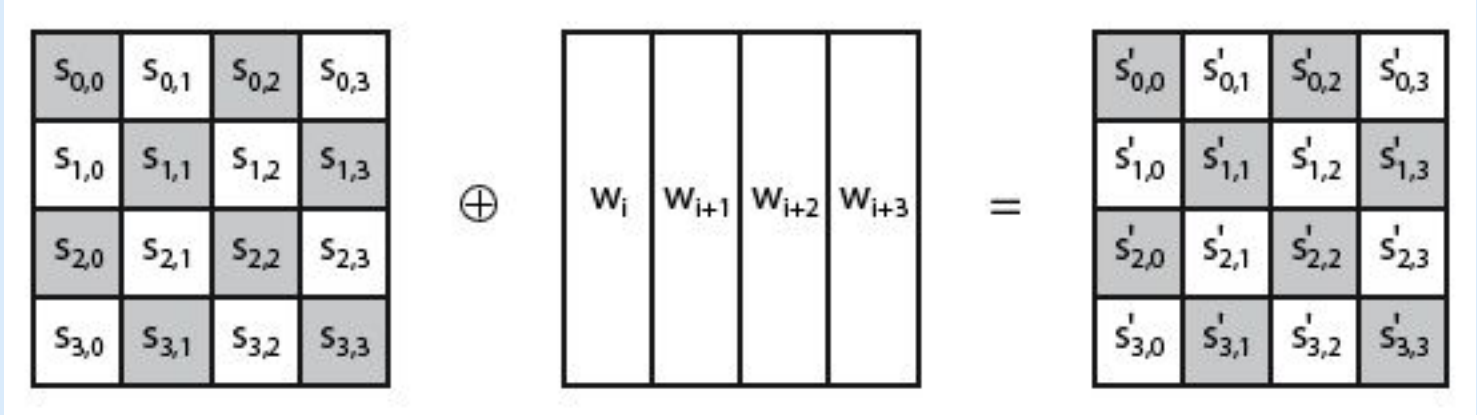

AES Round

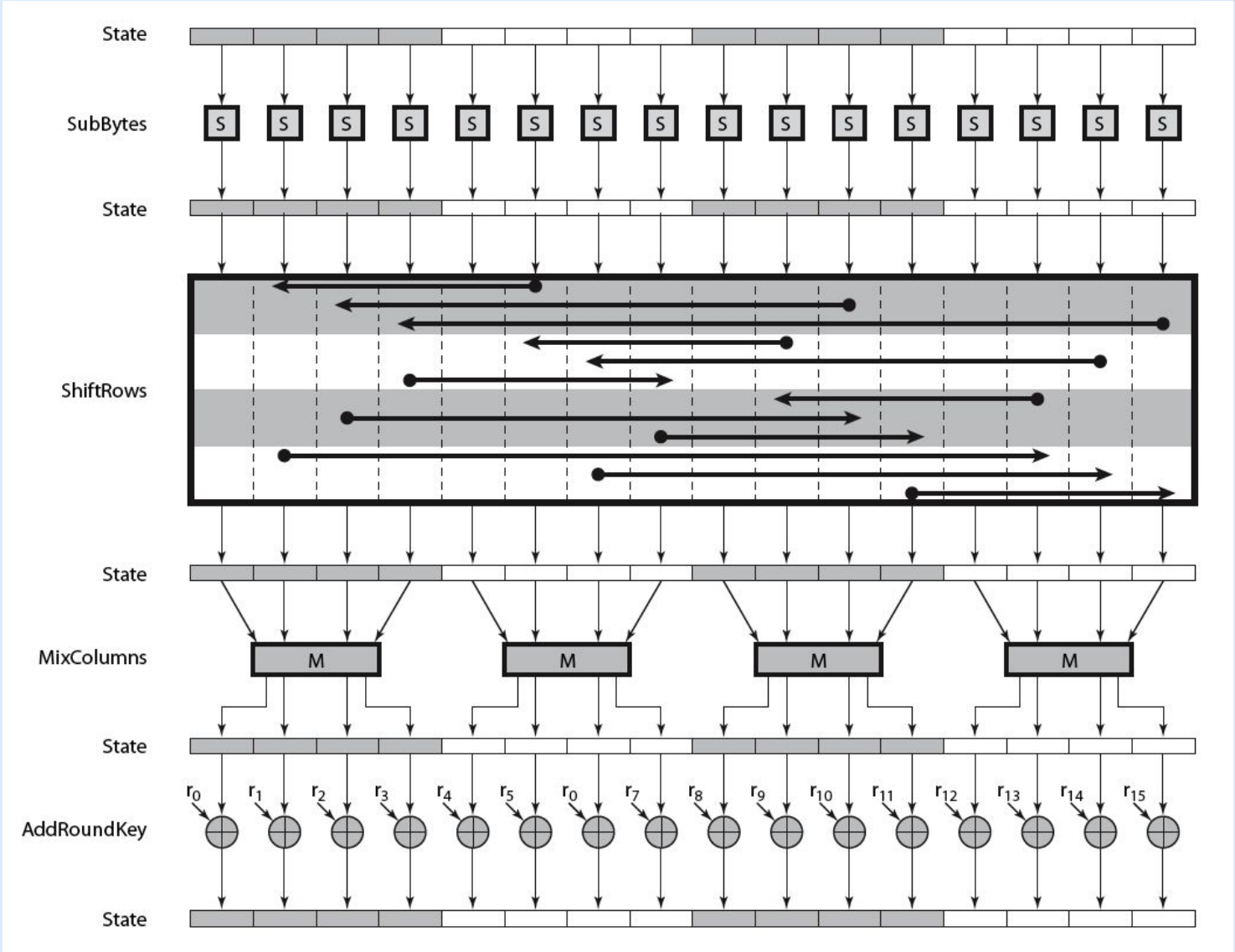
State
SubBytes
S
State
ShiftRows
State
MixColumns
M
State
AddRoundKey
r_0 r_1 r_2 r_3 r_4 r_5 r_0 r_7 r_8 r_9 r_{10} r_{11} r_{12} r_{13} r_{14} r_{15}
State

AES Key Schedule (generating round keys)

- takes 128-bits (16-bytes) key and expands into an array of 44 words (32-bit each)

Round	*Words*			
Pre-round	$\mathbf{w}_0$	$\mathbf{w}_1$	$\mathbf{w}_2$	$\mathbf{w}_3$
1	$\mathbf{w}_4$	$\mathbf{w}_5$	$\mathbf{w}_6$	$\mathbf{w}_7$
2	$\mathbf{w}_8$	$\mathbf{w}_9$	$\mathbf{w}_{10}$	$\mathbf{w}_{11}$
. . .	. . .			
N_r	$\mathbf{w}_{4N_r}$	$\mathbf{w}_{4N_r+1}$	$\mathbf{w}_{4N_r+2}$	$\mathbf{w}_{4N_r+3}$

AES Security

- AES was designed after DES.
  - Most of the known attacks on DES were already tested on AES.
- Brute-Force Attack
  - AES is definitely much more secure than DES due to the larger-size key.
- Statistical Attacks
  - Numerous tests have failed to do statistical analysis of the ciphertext
- Differential and Linear Attacks
  - There are no known differential and linear attacks on AES as yet.

Implementation Aspects

- The algorithms used in AES are so simple that they can be easily and efficiently implemented using cheap processors and a minimum amount of memory.
  - Fast implementation was a key factor in its selection as the AES

- Several modern CPU architectures include AES instructions: https://en.wikipedia.org/wiki/AES_instruction_set

AES illustrated

A stick figure guide

http://www.moserware.com/2009/09/stick-figure-guide-to-advanced.html

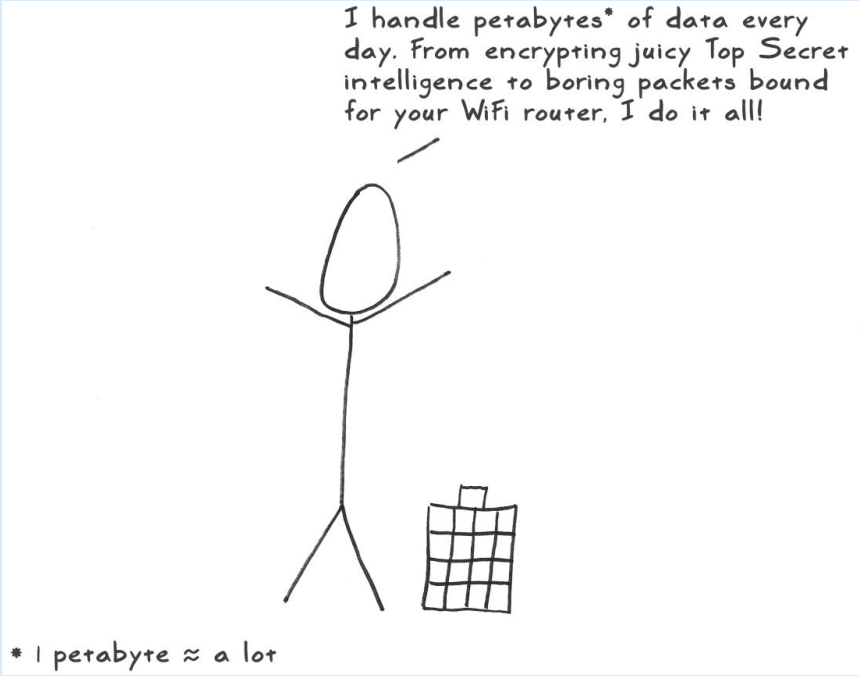

References

- Stallings CNS, chap 4, 6
- Forouzan, Cryptography & Network Security, chap 5-8
- Confusion, Diffusion and AES steps with reasoning: https://youtu.be/C4ATDMIz5wc
- AES illustrated: a stick figure guide: http://www.moserware.com/2009/09/stick-figure-guide-to-advanced.html
- Block cipher modes of operation – Computerphile: https://youtu.be/Rk0NIQfEXBA